THE INFORMATION DISCLOSED ON THIS DRAWING IS PROPRIETARY. IT IS ISSUED FOR ENGINEERING USE ONLY AND MAY NOT BE REPRODUCED OR DISCLOSED, IN WHOLE OR IN PART, TO ANYONE WITHOUT THE DIRECT WRITTEN PERMISSION OF KRYSTAL ENTERPRISES, INC
PARTS OR TOOLS MANUFACTURED TO MEET THE REQUIREMENTS OF THIS DRAWING MAY NOT BE USED BY OR SOLD TO ANYONE WITHOUT THE DIRECT WRITTEN PERMISSION OF KRYSTAL ENTERPRISES.

REVISIONS

REV	DESCRIPTION	DATE	APPD
N/C	NEW DRAWING RELEASE	X/XX/XX	

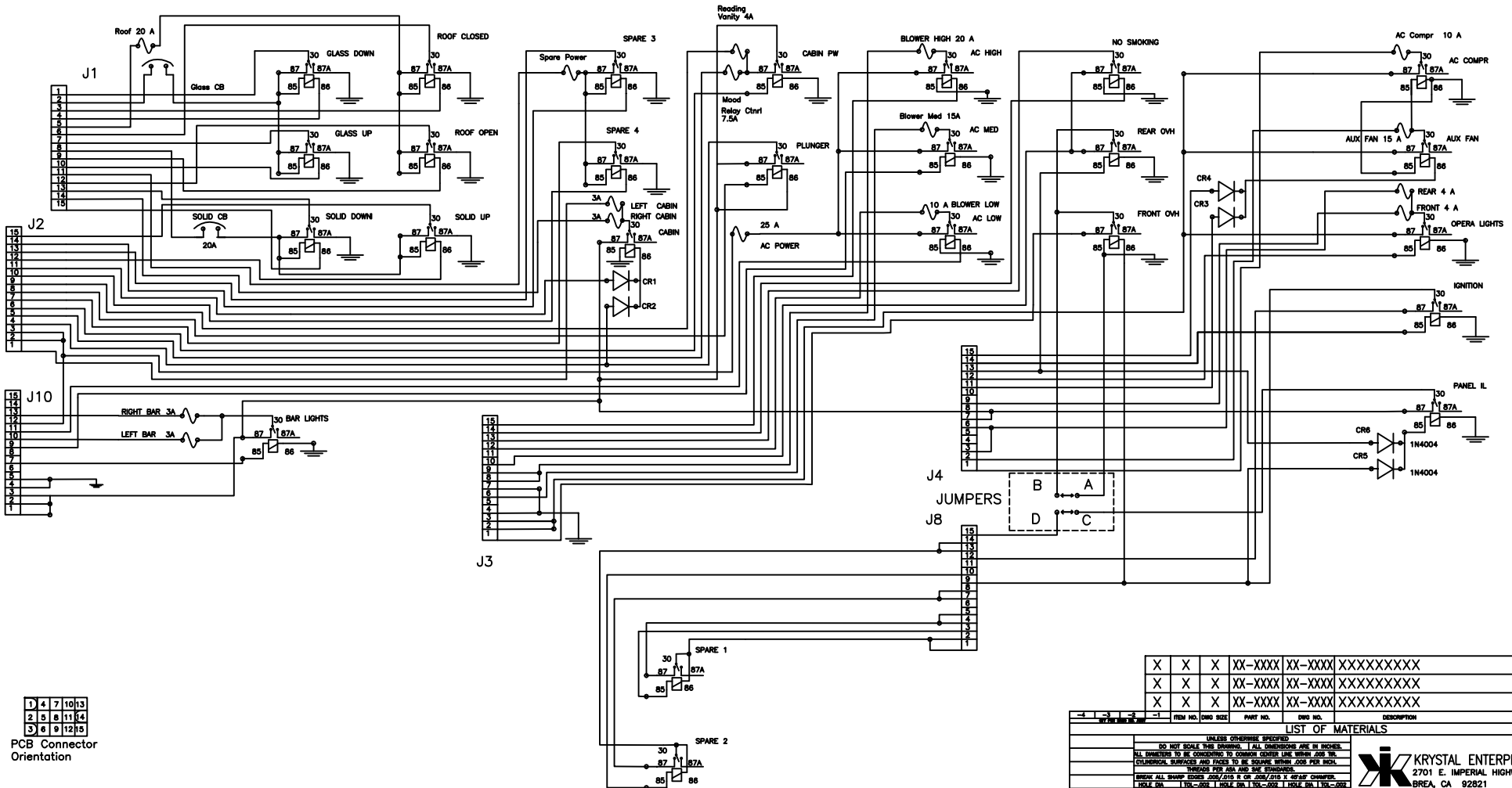

1	4	7	10	13
2	5	8	11	14
3	6	9	12	15

PCB Connector Orientation

NOTES: UNLESS OTHERWISE SPECIFIED

-4	-3	-2	-1	ITEM NO.	DWG SIZE	PART NO.	DWG NO.	DESCRIPTION	NOTES
X	X	X		XX-XXXX	XX-XXXX	XXXXXXXXX			
X	X	X		XX-XXXX	XX-XXXX	XXXXXXXXX			
X	X	X		XX-XXXX	XX-XXXX	XXXXXXXXX			

QTY PER ITEM NO. REF

LIST OF MATERIALS

UNLESS OTHERWISE SPECIFIED
DO NOT SCALE THIS DRAWING. ALL DIMENSIONS ARE IN INCHES.
ALL DIAMETERS TO BE CONCENTRIC TO COMMON CENTER LINE WITHIN .005 TIR.
CYLINDRICAL SURFACES AND FACES TO BE SQUARE WITHIN .005 PER INCH.
THREADS PER ASA AND SAE STANDARDS.
BREAK ALL SHARP EDGES .005/.015 R OR .005/.015 X 45°±5° CHAMFER.

	HOLE DIA	TOL-.002	HOLE DIA	TOL-.002	HOLE DIA	TOL-.002
XX-XXXX	.013-.128	+.003	.351-.500	+.005	.751-1.000	+.009
	.128-.250	+.004	.501-.750	+.007	1.001-2.000	+.011

TOLERANCES ON: DECIMALS .XXX=±.010 .XX=±.03 | FRACTIONS ±1/64 | ANGLES ±1° | SURFACE FINISH 63

NEXT ASSEMBLY

KRYSTAL ENTERPRISES
2701 E. IMPERIAL HIGHWAY
BREA, CA 92821

SPEC. CONTROL DWG

Relay Circuit Board 98 LTC

DR E. Franciscus	2/1/00	DESIGN	
CHK		APPD	

SIZE D | PART NUMBER 13-971 | REVISION X1
DRAWING NUMBER 100-084
SCALE: 1/1 | SHEET 1 OF 1