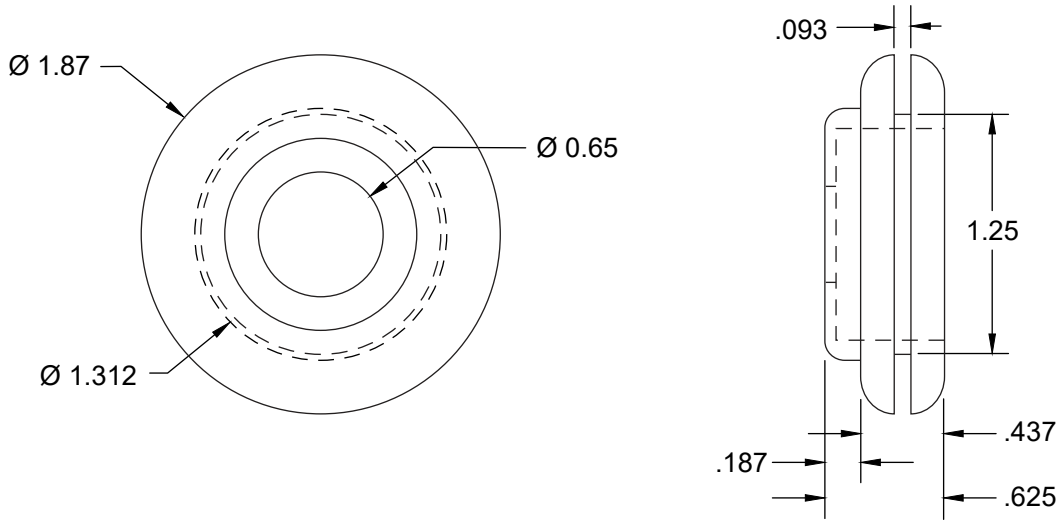

INFINITE INNOVATIONS SPECIALTY AUTOMOTIVE PARTS	PROJECT Part# ACHDW023				
	TITLE Universal Grommet				
PHONE 800-362-6224	SIZE A	CODE	DWG NO ACHDW023		REV A
CHECKED					
DRAWN John Matlack 3/18/2020	SCALE 1 : 1	WEIGHT		SHEET 1/1	